FEMALE END VIEW

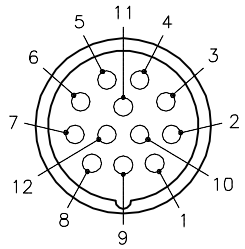

1 = BROWN
2 = ORANGE
3 = BLUE
4 = WHITE
5 = GREEN
6 = YELLOW
7 = GRAY
8 = PINK
9 = RED
10 = BLACK
11 = VIOLET
12 = TAN

M23 connector

SPECIFICATIONS

CONTACT CARRIER MATERIAL/COLOR	NYLON or PBT/GRAY
MOLDED HEAD MATERIAL/COLOR	TPU/BLACK
CONTACT MATERIAL/PLATING	BRASS/GOLD
COUPLING NUT MATERIAL/PLATING	BRASS/NICKEL
RATED CURRENT [A]	3.0 A
RATED VOLTAGE [V]	300 V
OUTER JACKET MATERIAL/COLOR	TPU/BLACK
CONDUCTOR INSULATION MATERIAL	PVC
NUMBER OF CONDUCTORS [AWG]	12x22 AWG
DRAIN/SHIELD	24 AWG DRAIN/POLYESTER FOIL SHIELD
TEMPERATURE RANGE	−40°C to +105°C (−40°F to +221°F)
PROTECTION CLASS	IEC IP67

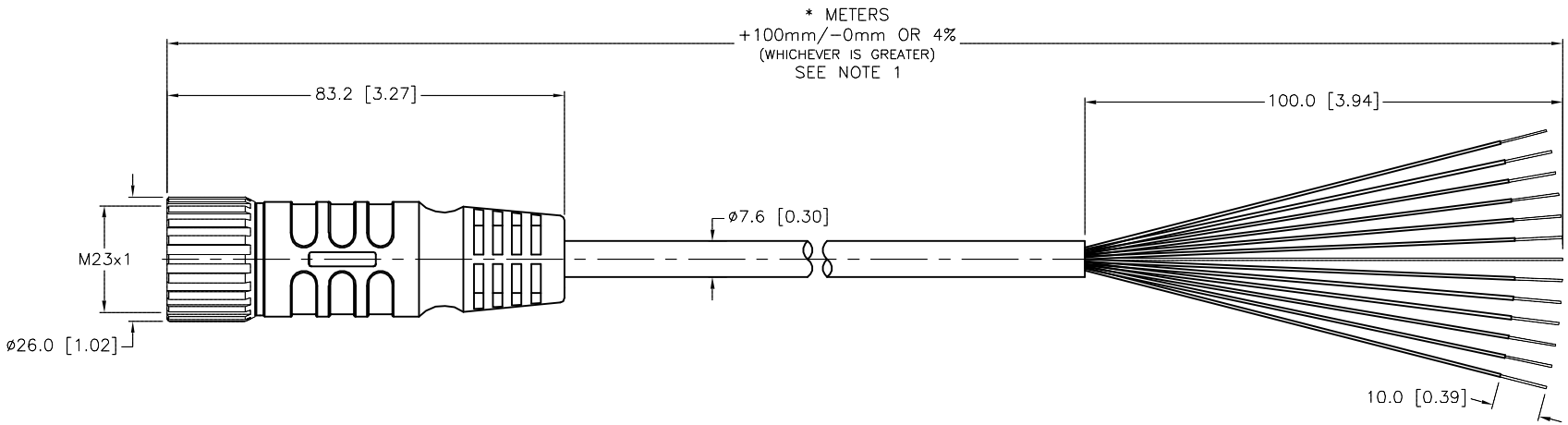

CABLE LENGTH	TOLERANCE *
ALL LENGTHS	+ 4% (OR 50mm) OF LENGTH − 0% (OR 0mm) OF LENGTH WHICHEVER IS GREATER
STRIP LENGTH	**TOLERANCE ***
0−7mm	±0.5mm
8−29mm	±1.0mm
30−49mm	±2.0mm
50−69mm	±3.0mm
70−100mm	±4.0mm
OVER 100mm	±5.0mm
* UNLESS OTHERWISE SPECIFIED	

NOTES:

1. "*" INDICATES CABLE LENGTH IN METERS. CONTACT TURCK TO ORDER SPECIFIC LENGTHS.

SOURCE DRAWING - FOR REFERENCE ONLY

RELATED DOCUMENTS
1.
2.
3.
4.

3RD ANGLE PROJECTION

THIS DRAWING IS CONFIDENTIAL AND THE PROPERTY OF TURCK INC. USE OF THIS DOCUMENT WITHOUT WRITTEN PERMISSION IS PROHIBITED.

TURCK INC
High Technology Sensors and Automation Controls
3000 CAMPUS DRIVE
MINNEAPOLIS, MN 55441
1−800−544−7769
(763) 553−7300
(763) 553−0708 fax
turck.com

MATERIAL: SEE SPECIFICATIONS

FINISH: SEE SPECIFICATIONS

ALL DIMENSIONS DISPLAYED ON THIS DRAWING ARE FOR REFERENCE ONLY

CONTACT TURCK FOR MORE INFORMATION

DRFT: RWC | DATE: 02/25/05
DSGN: | SCALE: 1=1.5

UNIT OF MEASUREMENT
MILLIMETER [INCH]
DO NOT SCALE THIS DRAWING

DESCRIPTION: CKM 12−001−*

IDENTIFICATION NO.:

REV: F

FILE: 777007085 | SHEET 1 OF 1

REV	DESCRIPTION	BY	DATE	ECO NO.
F	DRAWING PROCESSED AS PART OF ECO 33971	CBM	04/06/11	33971